TrynEx International, LLC, 531 Ajax Drive, Madison Heights, MI 48071-2429 • www.snowexproducts.com

September 1, 2026
Lit. No. 84960, Rev. 06

UTV Straight Blade

Blade Assembly 77760
Center Assembly 77860

Parts List

AUTHENTIC SNOWEX PARTS & ACCESSORIES

A DIVISION OF DOUGLAS DYNAMICS, LLC

TABLE OF CONTENTS

UTV STRAIGHT BLADE ASSEMBLY 4

HEADGEAR AND A-FRAME ASSEMBLY 6

HYDRAULIC COMPONENTS 8

Hydraulic Unit 8

Lift and Angle Rams 10

Hoses and Fittings 10

VEHICLE-SIDE HARNESS DIAGRAM 11

Blade Components

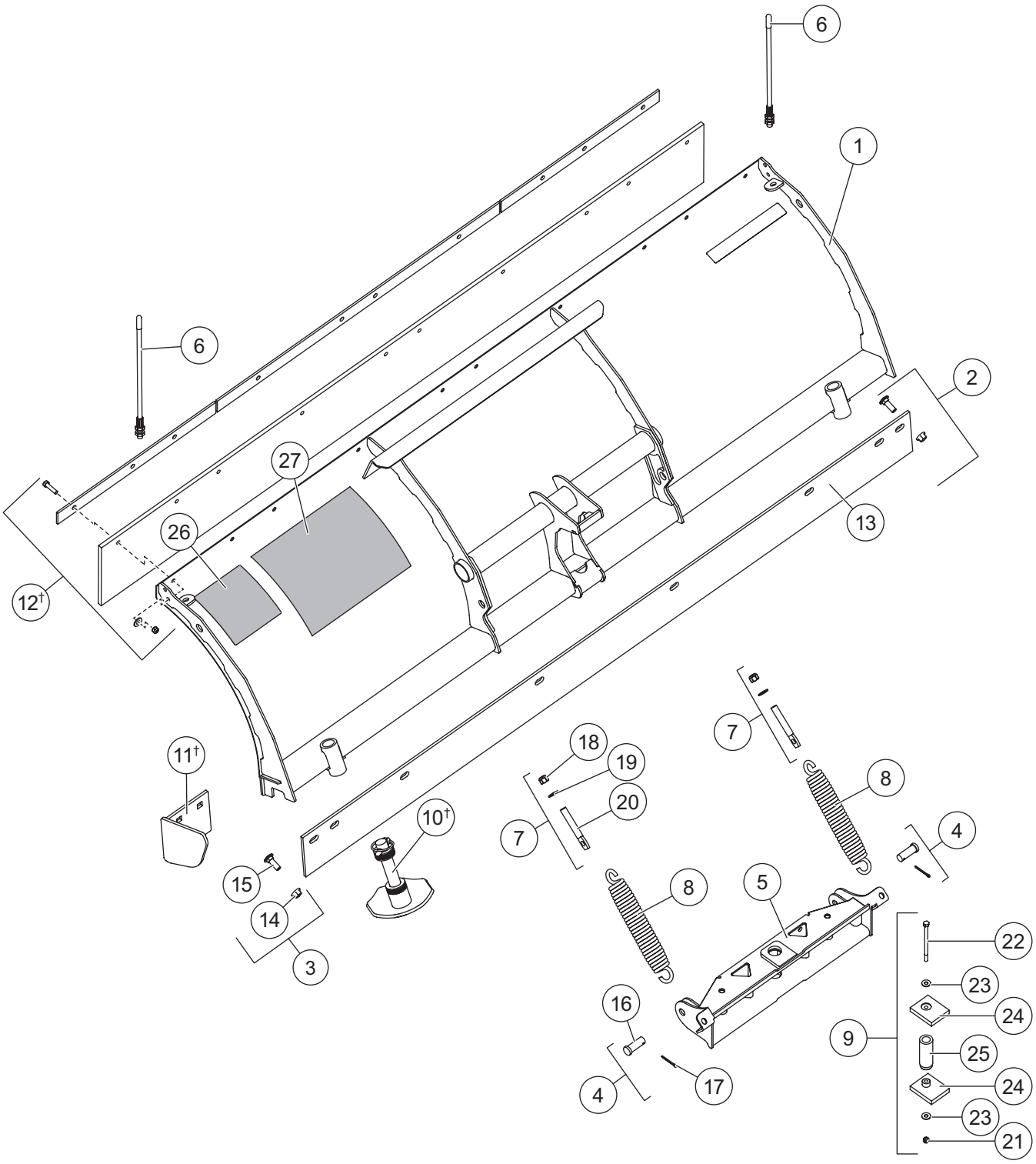

† **Accessory only.**

UTV STRAIGHT BLADE ASSEMBLY

77860 UTV Straight Blade Components							
Item	**Part**	**Qty**	**Description**	**Item**	**Part**	**Qty**	**Description**
1	85189	1	UTV Blade w/Labels	8	B61167	2	Trip Spring
2	84971	1	1/4 Steel Cutting Edge Kit	9	84629	1	Center Pivot Bolt Kit
3	84977	1	Cutting Edge Bolt Bag	10†	84988	1	Shoe Assembly Kit
4	84631	2	3/4 x 2 Clevis Pin Kit w/Cotter	11†	84989	1	Curb Guard Kit
5	84573	1	Quadrant	12†	84984	1	Rubber Deflector Kit
6	92075	1	Blade Guide Kit	ns	85192	1	Blade Label Kit
7	84702	2	Eyebolt Kit				
Item 2			**84971 1/4 Steel Cutting Edge Kit**				
3	84977	1	Cutting Edge Bolt Bag	13	84972	1	1/4 Steel Cutting Edge
Item 3			**84977 Cutting Edge Bolt Bag**				
14		8	1/2-13 Hex Locknut GB	15		8	1/2-13 x 1-1/2 Carriage Bolt G8
Item 4			**84631 3/4 x 2 Clevis Pin Kit w/Cotter**				
16		2	3/4 x 2 Clevis Pin	17		2	5/32 x 1-1/2 Cotter Pin
Item 7			**84702 Eyebolt Kit**				
18		1	5/8-11 Hex Locknut GB	20		1	5/8-11 x 4 Eyebolt
19		1	5/8 Hardened Flat Washer				
Item 9			**84629 Center Pivot Bolt Kit**				
21		1	5/16-18 Hex Locknut GB	24	27615	2	Bumper, Compact Plow
22		1	5/16-18 x 5 Hex Cap Screw G5	25		1	Pivot Tube
23		2	5/16 Flat Washer Type A				
85192 Blade Label Kit							
26	84847	1	Label – Warning/Caution, UTV	ns	77714	1	Label – Logo, UTV
27	88335	1	Label – Attach/Detach, UTV				
ns = not shown							G = Grade

† Accessory only.

Headgear and A-Frame Components

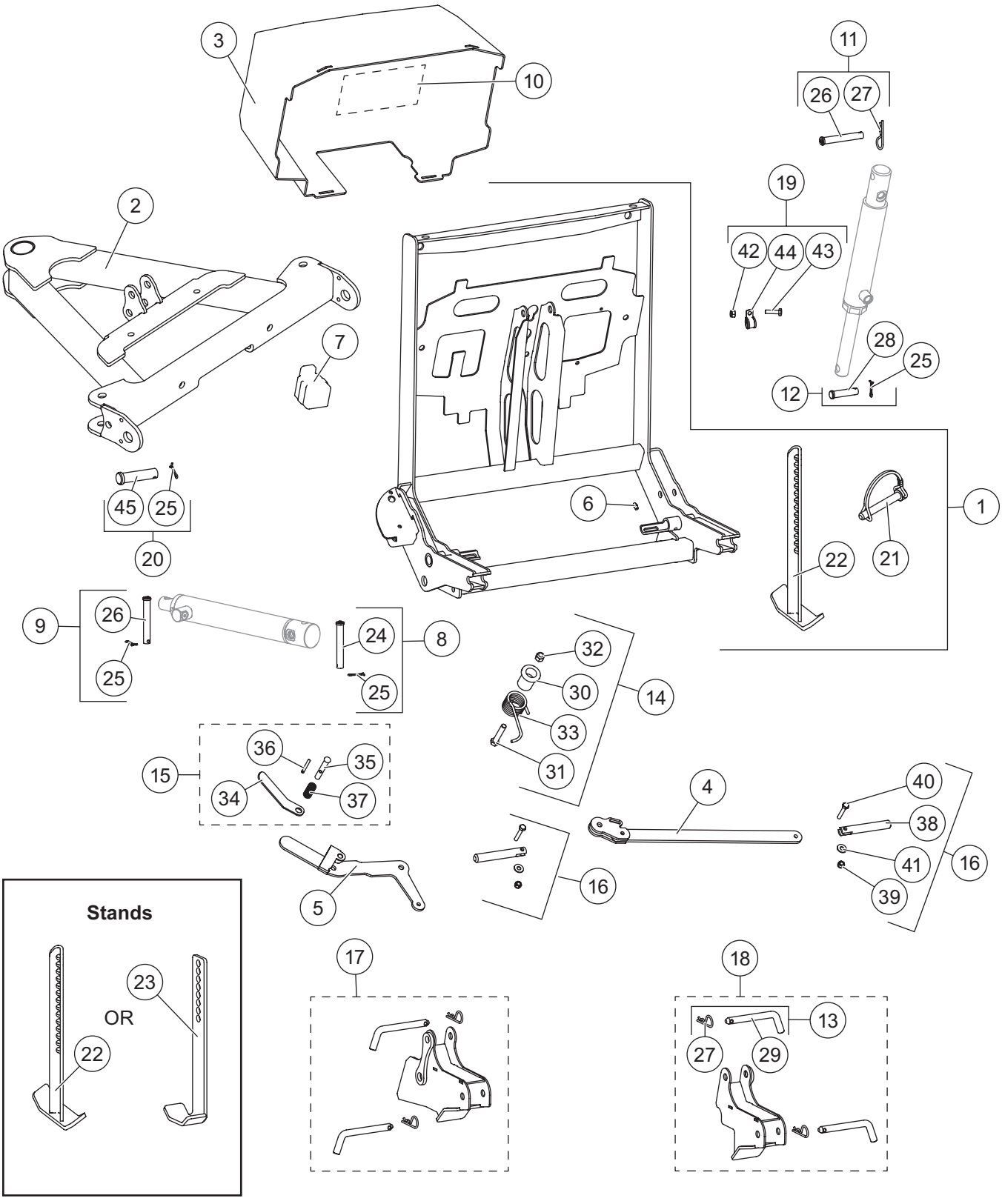

UTV STRAIGHT BLADE HEADGEAR AND A-FRAME ASSEMBLY

UTV Straight Blade Headgear and A-Frame Components							
Item	**Part**	**Qty**	**Description**	**Item**	**Part**	**Qty**	**Description**
1	86659	1	Headgear Kit	13	84610	4	Receiver Pin Kit
2	85193	1	A-Frame	14	83636	1	Torsion Spring/Spacer Kit
3	85194	1	Hydraulic Cover (incl. item 10)	15	83633	1	Attach Handle Release Cam Kit
4	83635	1	Link	16	84602	2	Hitch Pin Kit
5	83634	1	Handle	17	83637	1	Receiver Kit, DS
6	84616	1	Grease Zerk (pkg of 3)	18	83638	1	Receiver Kit, PS
7	61246	1	Cable Boot	19	84778	1	Power Cable Clamp Loop Kit
8	83629	2	Angle Ram Base Pin Kit	20	83630	1	A-Frame Pin Kit
9	85198	2	Angle Ram Rod Pin Kit	21	77650	1	Wire-Lock Clevis Pin
10	84963	1	Label − Information, Hydraulic	22	87046	1	Stand, V-Stem
11	85199	1	Lift Ram Base Pin Kit	23	84846	1	Stand, Flat Stem
12	84627	1	Lift Ram Rod Pin Kit				
Item 1			**86659 Headgear Kit**				
		1	Headgear	22	87046	1	Stand, V-Stem
21	77650	1	Wire-Lock Clevis Pin				
Item 8			**83629 Angle Ram Base Pin Kit**				
24		1	1/2 x 3-11/16 Clevis Pin HT	25		1	5/32 x 1-1/2 Cotter Pin
Item 9			**85198 Angle Ram Rod Pin Kit**				
25		1	5/32 x 1-1/2 Cotter Pin	26		1	1/2 x 2-7/8 Clevis Pin HT
Item 11			**85199 Lift Ram Base Pin Kit**				
26		1	1/2 x 2-7/8 Clevis Pin HT	27		1	1/8 Hairpin Cotter
Item 12			**84627 Lift Ram Rod Pin Kit**				
25		1	5/32 x 1-1/2 Cotter Pin	28		1	1/2 x 2-1/8 Clevis Pin HT
Item 13			**84610 Receiver Pin Kit**				
27		1	1/8 Hairpin Cotter	29		1	1/2 x 4 Clevis Pin
Item 14			**83636 Torsion Spring/Spacer Kit**				
30		1	Spacer, Handle Spring	32		1	3/8-16 Hex Locknut GB
31		1	3/8-16 x 2-1/4 Hex Cap Screw G5	33		1	Torsion Spring
Item 15			**83633 Attach Handle Release Cam Kit**				
34		1	Handle Lock Pin Lever	36		1	3/16 x 1-3/8 Spring Pin SS
35		1	Lock Pin	37		1	Stand Lock Pin Spring
Item 16			**84602 Hitch Pin Kit**				
38		1	Hitch Pin	40		1	1/4-20 x 1-1/2 Hex Cap Screw SS
39		1	1/4-20 Hex Locknut GB	41		1	1/4 Flat Washer Type A Wide
Item 17			**83637 Receiver Kit – DS**				
		1	Receiver – DS	13		2	Receiver Pin Kit
Item 18			**83638 Receiver Kit – PS**				
		1	Receiver – PS	13		2	Receiver Pin Kit
Item 19			**84778 Power Cable Clamp Loop Kit**				
42		1	1/4-20 Hex Locknut GB	44		1	#10 Clamp Loop
43		1	1/4-20 x 1 Hex Cap Screw G5				
Item 20			**83630 A-Frame Pin Kit**				
25		1	5/32 x 1-1/2 Cotter Pin	45		1	3/4 x 3 Clevis Pin
G = Grade			HT = Heat Treated				SS = Stainless Steel

Hydraulic Unit Components

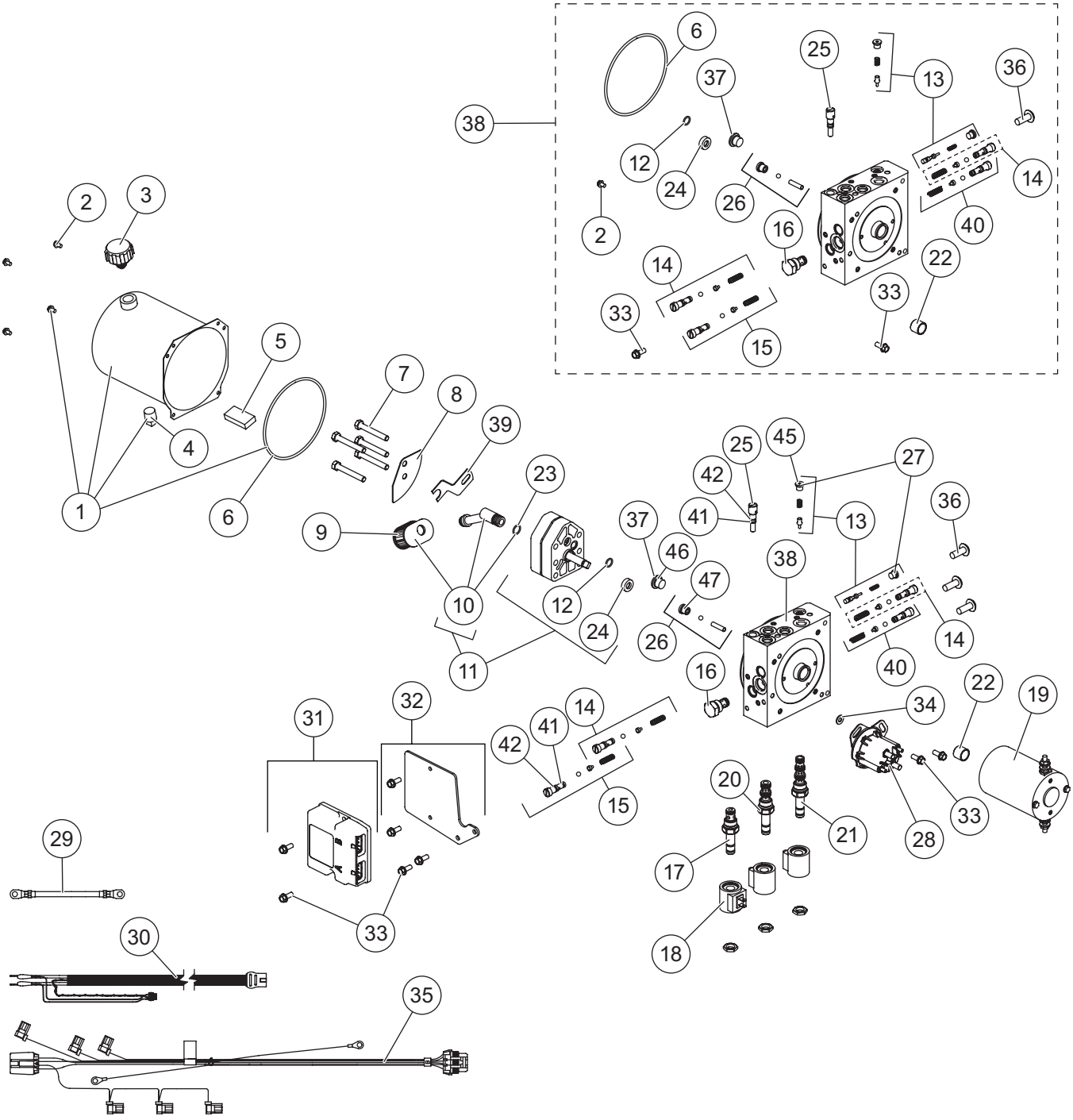

84949 Hydraulic Unit							
Item	**Part**	**Qty**	**Description**	**Item**	**Part**	**Qty**	**Description**
1	52289	1	Reservoir Kit	26	48518	1	Check Valve Assembly
2	66607	4	#10-24 x 5/16 Slotted Hex Washer-Head Machine Screw	27	92960	2	3/8-24 O-Ring Boss Plug
				28	52290	1	Motor Relay
3	48278	1	Breather	29	29071	1	Cable Assembly, 8"
4	92079	1	Plug 3/8 NPTF	30	52291	1	Cable Assembly, Plow
5	73897	1	Magnet	31	49567	1	Plow Module
6	66519	1	O-Ring 2 -250	32	84957	1	Module Plate w/Screws
7	90073	5	5/16-18 x 2-1/4 Hex Cap Screw G5	33	44355	6	1/4-20 x 5/8 Hex Washer-Head Thread-Rolling Screw
8	48464	1	Plate Baffle				
9	48281	1	Filter	34	91119	1	3/16 Flat Washer Type A Special
10	84955	1	Inlet Fitting w/Filter	35	84956	1	Harness, Plow Control 3-Solenoid
11	84954	1	Pump Kit	36	98043	3	3/8-16 x 1 Button Head Cap Screw
12	56274	1	O-Ring -013	37	56532	1	Plug, -6 SAE O-Ring Boss
13	84953	1	Poppet Check Valve Kit	38	84950	1	Manifold Assy w/o Valves (incl. items 2, 6, 12, 13, 14, 15, 16, 22, 24, 25, 26, 33, and 36)
14	52283	2	Relief Valve Kit (2 sets)				
15	52284	1	Relief Valve Kit				
16	48287	1	Check Valve	39	64570	1	Retainer Clip
17	49690	1	Valve 2-Way w/Nut	40	52282	1	Relief Valve (1 set)
18	52294	3	Coil w/Spade Terminals	41	48239	1	O-Ring -106
19	52299	1	Motor Assembly 3"	42	48240	1	Back-Up Ring -106
20	84951	1	Valve 3-Way w/Nut	43	55371	4	O-Ring -008
21	84952	1	Valve 4-Way w/Nut	44	25731	4	O-Ring -010
22	56364*	1	Bearing, Sleeve	45	26784	2	O-Ring -903
	52251	1	Bearing Tool Kit w/Bearing	46	56569	1	O-Ring -906
23	56416	1	O-Ring -014	47	44343	1	O-Ring -904
24	66515**	1	Pump Shaft Seal	ns	52252	1	Seal Repair Tool w/Seal
25	48517	1	Quill				
O-Ring Service Kits							
ns	52298-3	–	O-Ring Kit	ns	48309	–	Seal Kit Cartridge 3-Way and 4-Way Valve
ns	48310	–	Seal Kit 2-Way Valve				
ns = not shown							G = Grade

* Use 52251 tool to install (includes 56364)

** Use 52252 tool to install (includes 66515)

Lift and Angle Ram Components

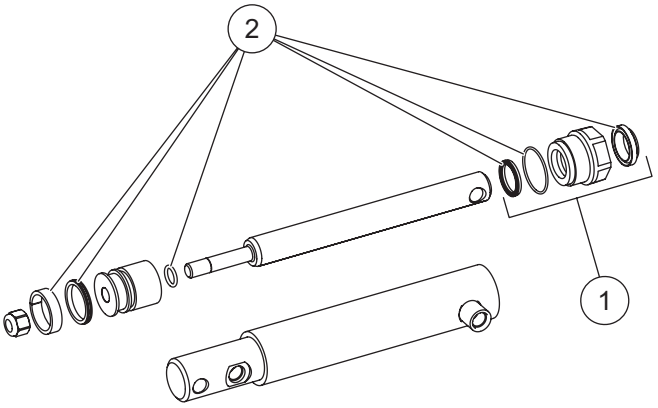

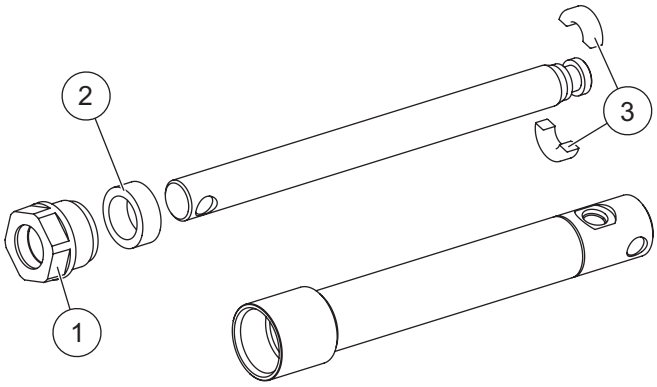

77486 Lift Ram Assembly 1-1/2 x 6 DA			
Item	**Part**	**Qty**	**Description**
1	52277	1	1" Gland Nut Assembly
2	52302	1	Seal Kit 1-1/2 DA Ram

77483 Angle Ram Assembly 1 x 7			
Item	**Part**	**Qty**	**Description**
1	52277	1	1" Gland Nut Assembly
2	56803	1	Spacer
3	52276	1	1" Split Bearing Kit

Hoses and Fittings

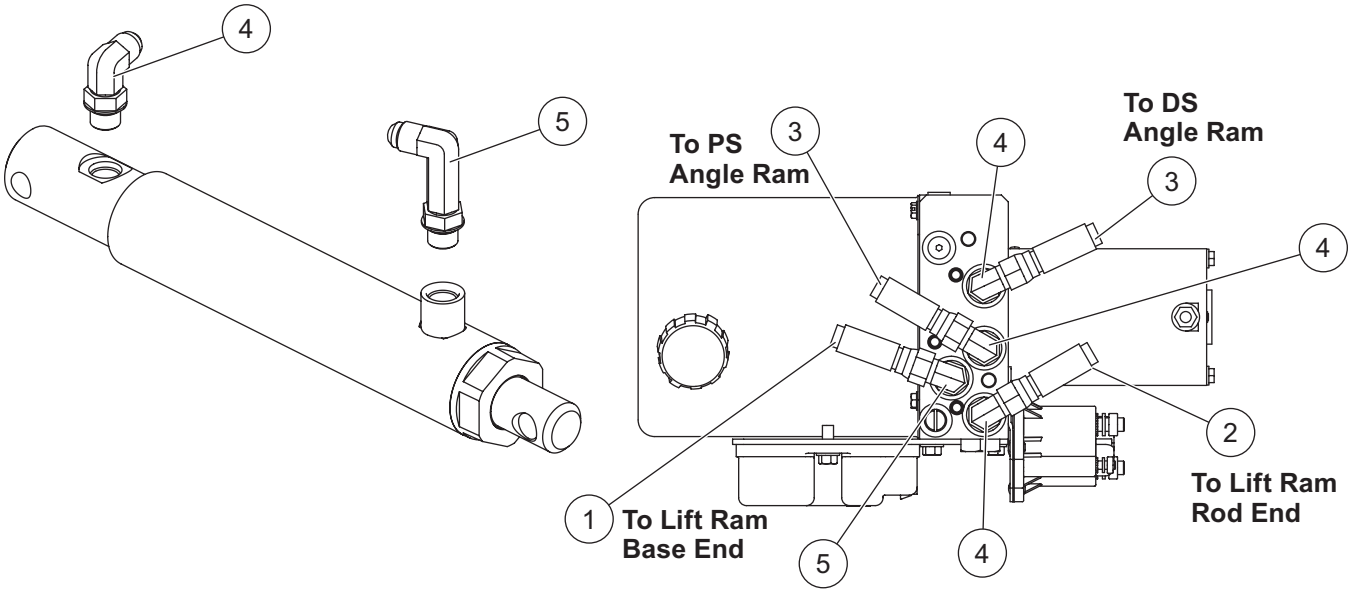

Hoses and Fittings							
Item	**Part**	**Qty**	**Description**	**Item**	**Part**	**Qty**	**Description**
1	84446	1	Hose, 1/4 x 14 w/F JIC Ends	5	40572	2	Elbow, Extra Long 90° –6 M JIC/–6 M ORB
2	84453	1	Hose, 1/4 x 20 w/F JIC Ends				
3	84810	2	Hose, 1/4 x 32 w/F JIC Ends	ns	56823	1	Hose Wrap
4	56615-1	6	Elbow, 90° –6 M JIC/–6 M ORB				
F = Female			ns = not shown				M = Male

Vehicle-Side Harness Diagram

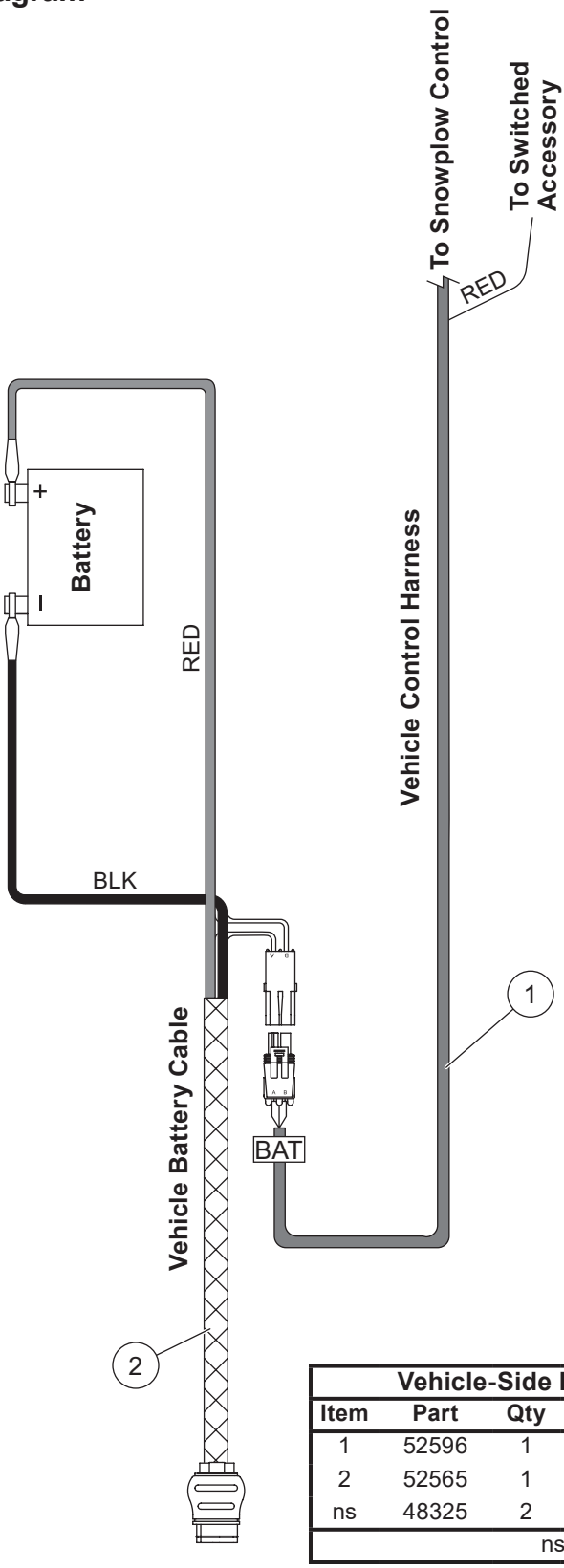

Vehicle-Side Electrical Components			
Item	**Part**	**Qty**	**Description**
1	52596	1	Vehicle Control Harness
2	52565	1	Vehicle Battery Cable
ns	48325	2	Plug Cover
ns = not shown			

TrynEx International, LLC
531 Ajax Drive
Madison Heights, MI 48071-2429
www.snowexproducts.com

A DIVISION OF DOUGLAS DYNAMICS, LLC

Copyright © 2026 Douglas Dynamics, LLC. All rights reserved. This material may not be used, reproduced, or copied in any manner, in whole or in part, in any printed, mechanical, electronic, film, or other distribution and storage media, nor analyzed or manipulated in any manner for the purpose of training artificial intelligence technologies or systems, without the written consent of TrynEx International, LLC. In accordance with Article 4(3) of the Digital Single Market Directive 2019/790, TrynEx International expressly reserves this work from the text and data mining exception. Authorization to photocopy items for internal or personal use by TrynEx International outlets or equipment owner is granted.

TrynEx International reserves the right under its product improvement policy to change construction or design details and furnish equipment when so altered without reference to illustrations or specifications used. TrynEx International or the vehicle manufacturer may require or recommend optional equipment for snow removal. Do not exceed vehicle ratings with a snowplow. TrynEx International offers a limited warranty for all equipment and accessories. See separately printed page for this important information. The following is a registered (®) trademark of Douglas Dynamics, LLC: SnowEx®.

Printed in U.S.A.